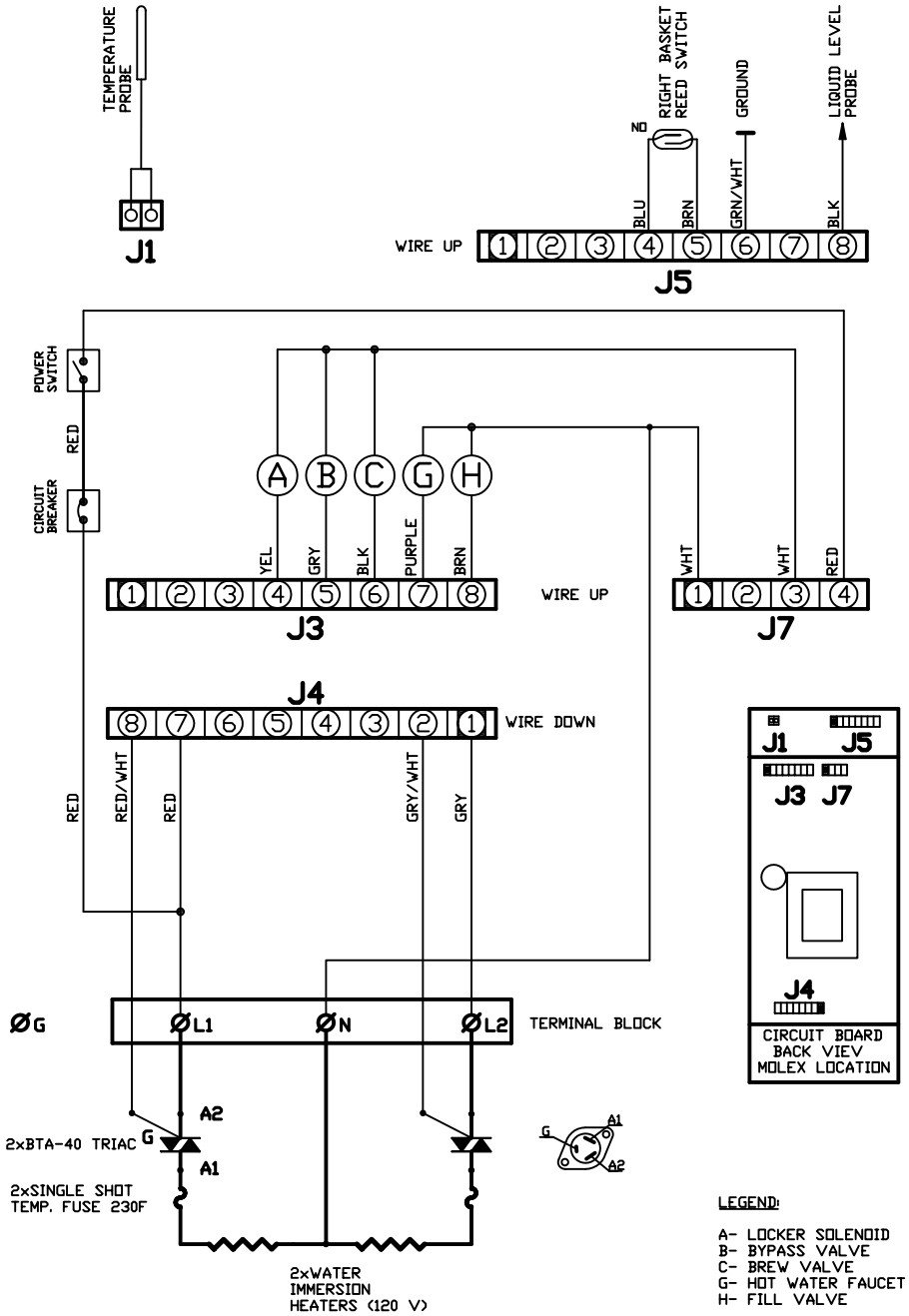

FETCO
FOOD EQUIPMENT TECHNOLOGIES COMPANY, INC.
600 ROSE RD. LAKE ZURICH, IL. 60047,
PHONE: (800) 338-2699; (847)-719-3000, FAX: (847)-719-3001
e-MAIL: techsupport@fetco.com. http://www.fetco.com

FETCO PRODUCT NO.	DESCRIPTION	WIRING DIAGRAM NO.
CBS-2031s	WIRING DIAGRAM, CBS-2031s, 1PH, 3WIRES, + GRD, 2 HEATERS	401254-001

FETCO
FOOD EQUIPMENT TECHNOLOGIES COMPANY, INC.
600 ROSE RD. LAKE ZURICH, IL. 60047,
PHONE: (800) 338-2699; (847)-719-3000, FAX: (847)-719-3001
e-MAIL: techsupport@fetco.com. http://www.fetco.com

FETCO PRODUCT NO.	DESCRIPTION	WIRING DIAGRAM NO.
CBS-2031s	WIRING DIAGRAM, CBS-2031s, 1PH, 3WIRES, + GRD, 2 HEATERS	401254-001